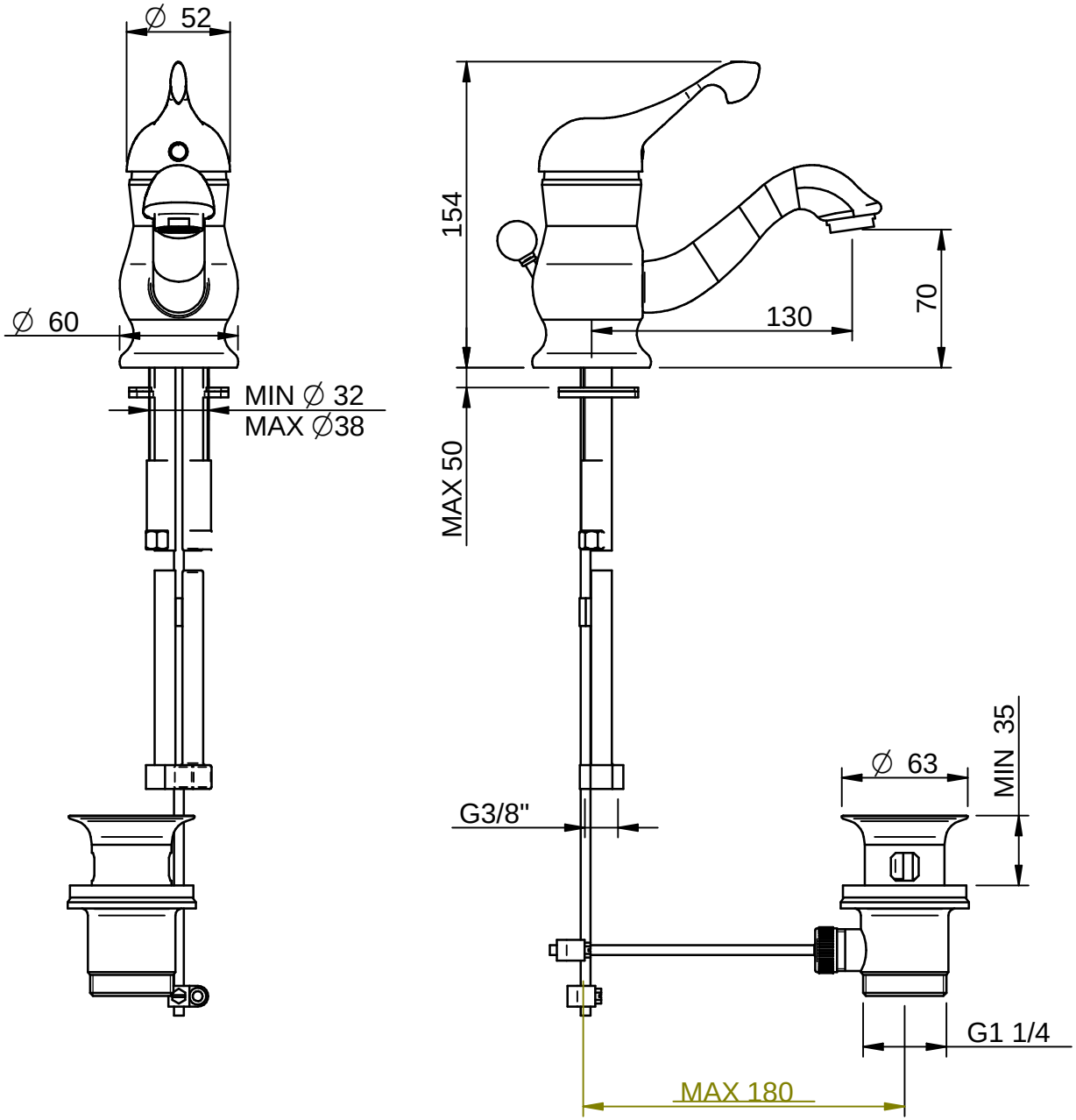

CODE ART. IT2110CCPYZZ_I01

RUBINETTERIE
treemme